System Solutions for STB & OTT

Power Management (DC-DC Converter)

Bruce Lu
Systems and Application Engineer
September 2019

Agenda

1. Introduction
2. Power Solutions for STB
3. MV Buck IC Road Map for STB
    1) Low Current Solutions (<6A)
    2) High Current Solutions (≥6A)
    3) Satellite Receiver LNB Power Solution
4. TI Reference Designs
5. Webench®

Systems Coverage

Home theater & entertainment Sector

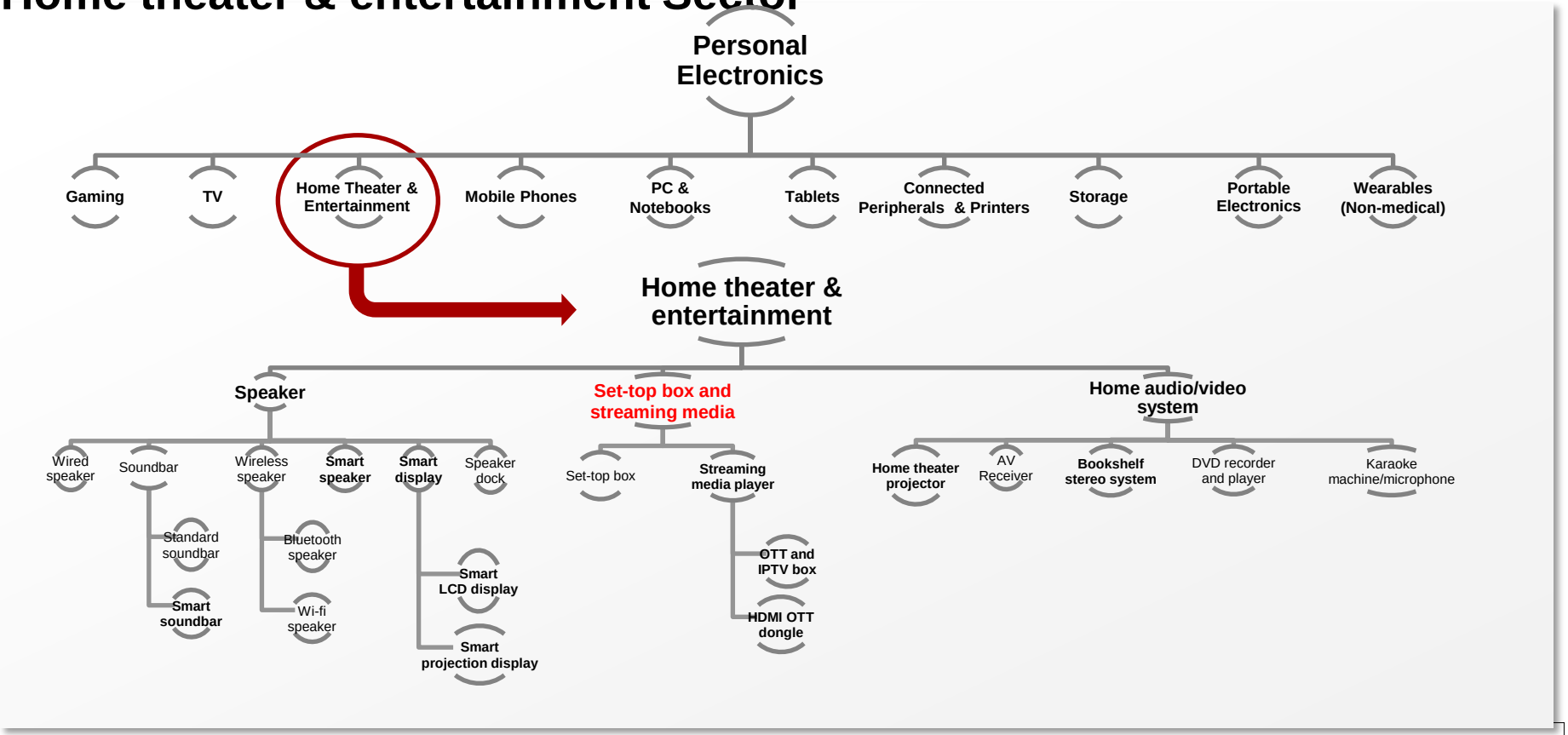

STB - Product Segment

Set–Top–Box (STB) is a wide and fast developing concept.

- STB can be divided into different sectors by media resource:
  Terrestrial STB, Cable STB, Satellite STB, IPTV/OTT

- STB adopts storage functions so that DVR, PVR are featured in;

- Multimedia Home Gateway + Client Box
  - Acting as Gateway
  - Watching, Recording media content on any devices in any of rooms in your house

STB & DVR
System Solutions from TI

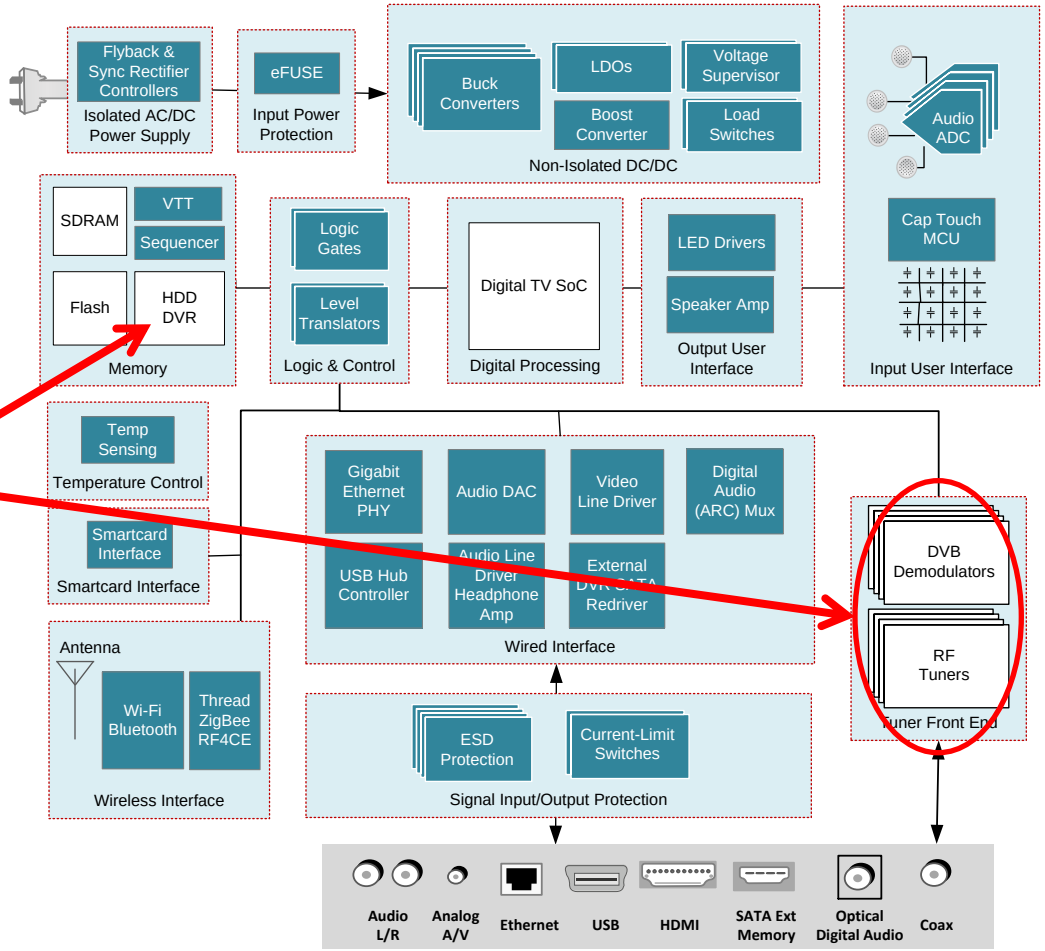

http://www.ti.com/solution/stb-dvr

Streaming Media Player

System Solutions from TI

OTT STB

No Coax

IPTV

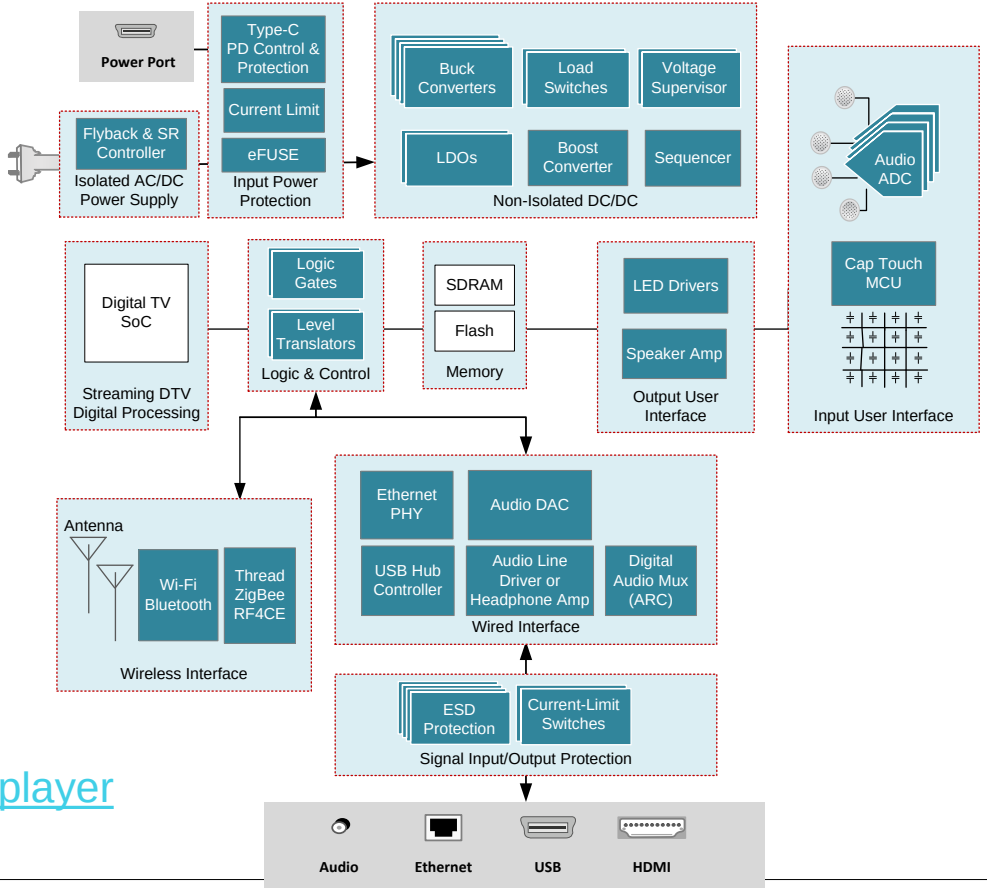

http://www.ti.com/solution/streaming-media-player

Power Solutions for STB

Power Tree Options

STB Power Supply Reference Design

Optimized for 12Vin STB w/ DAC VCore AVS

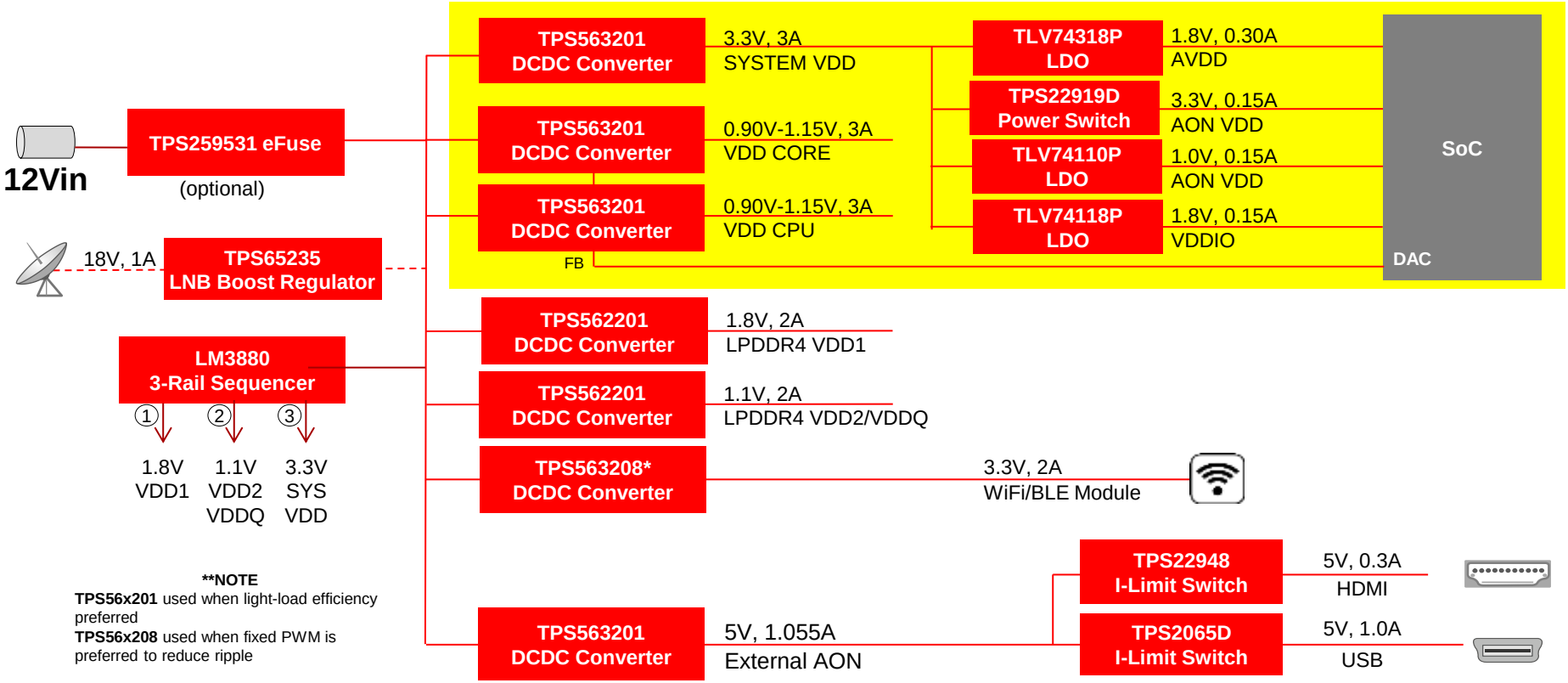

****NOTE**
TPS56x201 used when light-load efficiency preferred
TPS56x208 used when fixed PWM is preferred to reduce ripple

STB Power Supply Reference Design

Optimized for STB SoC PMIC replacement w/ DAC VCore AVS

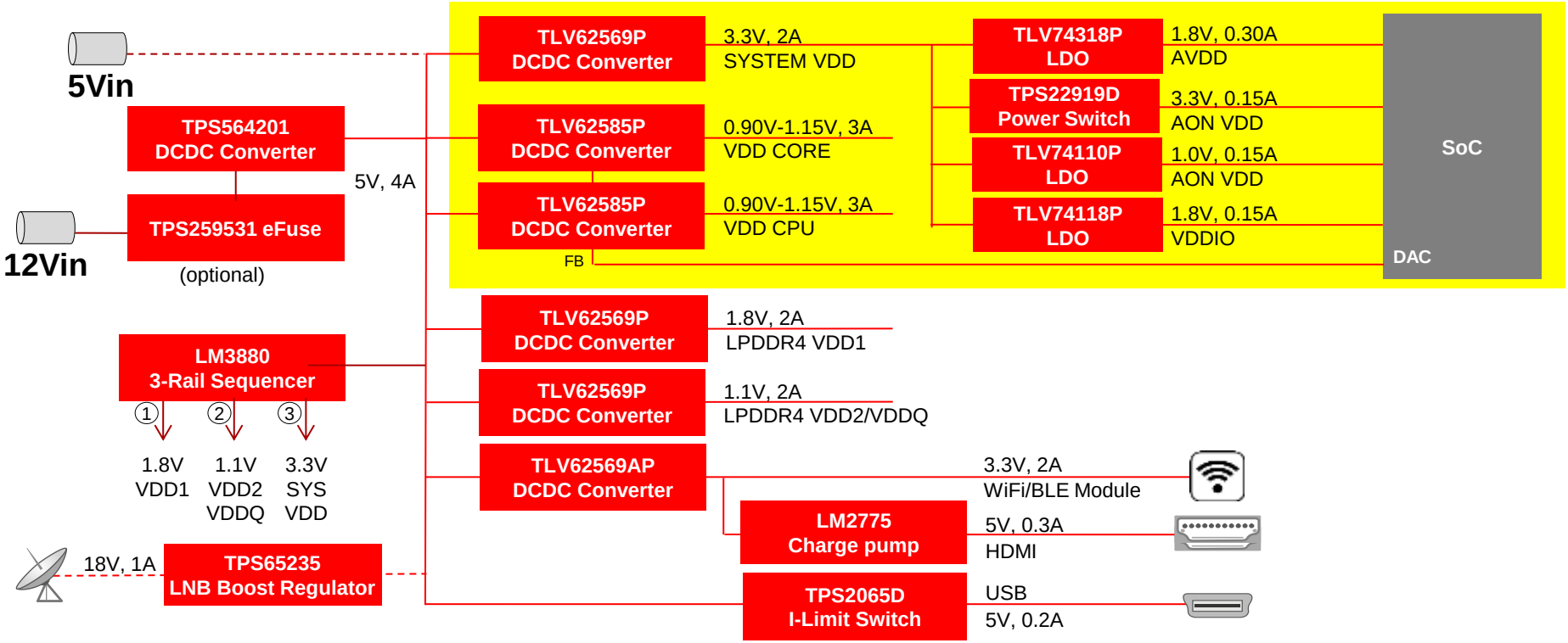

STB Power Supply Reference Design

Optimized for STB SoC PMIC replacement w/ I2C VCore AVS

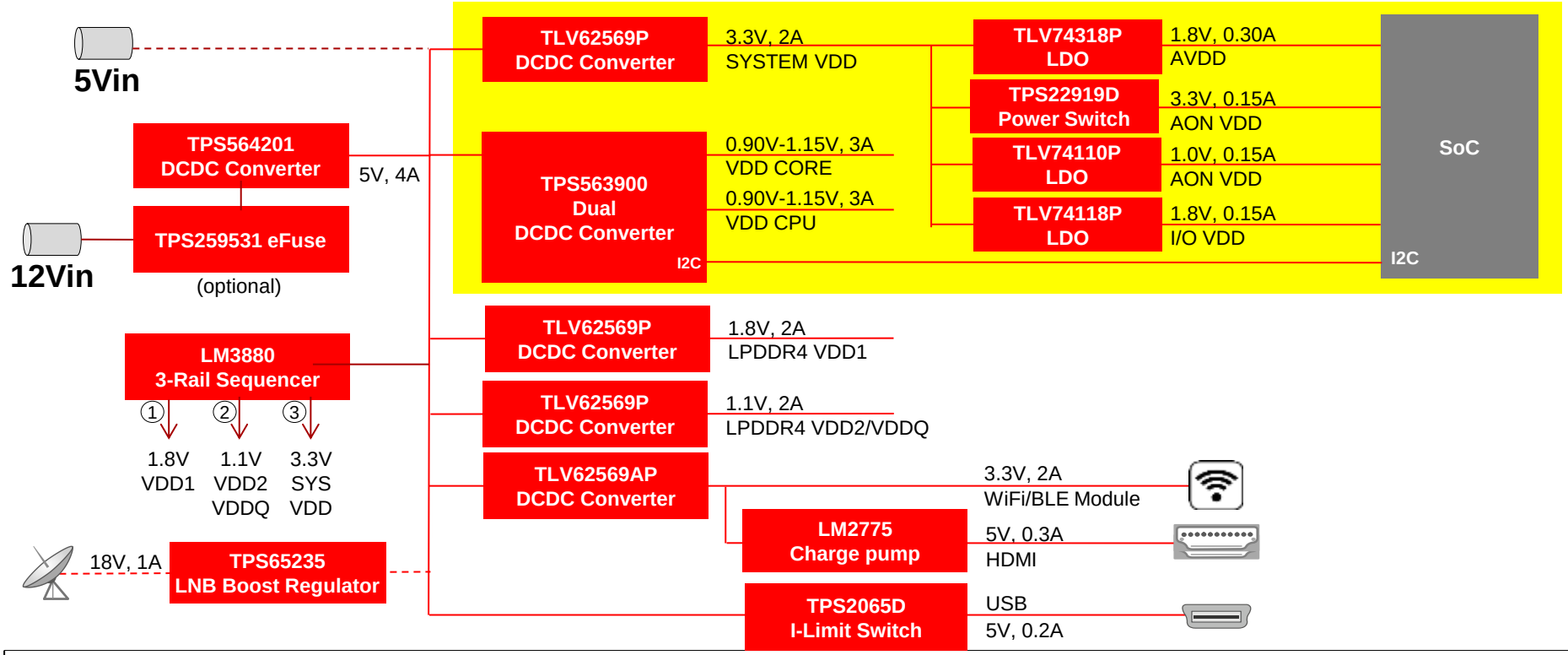

MV DCDC Roadmap

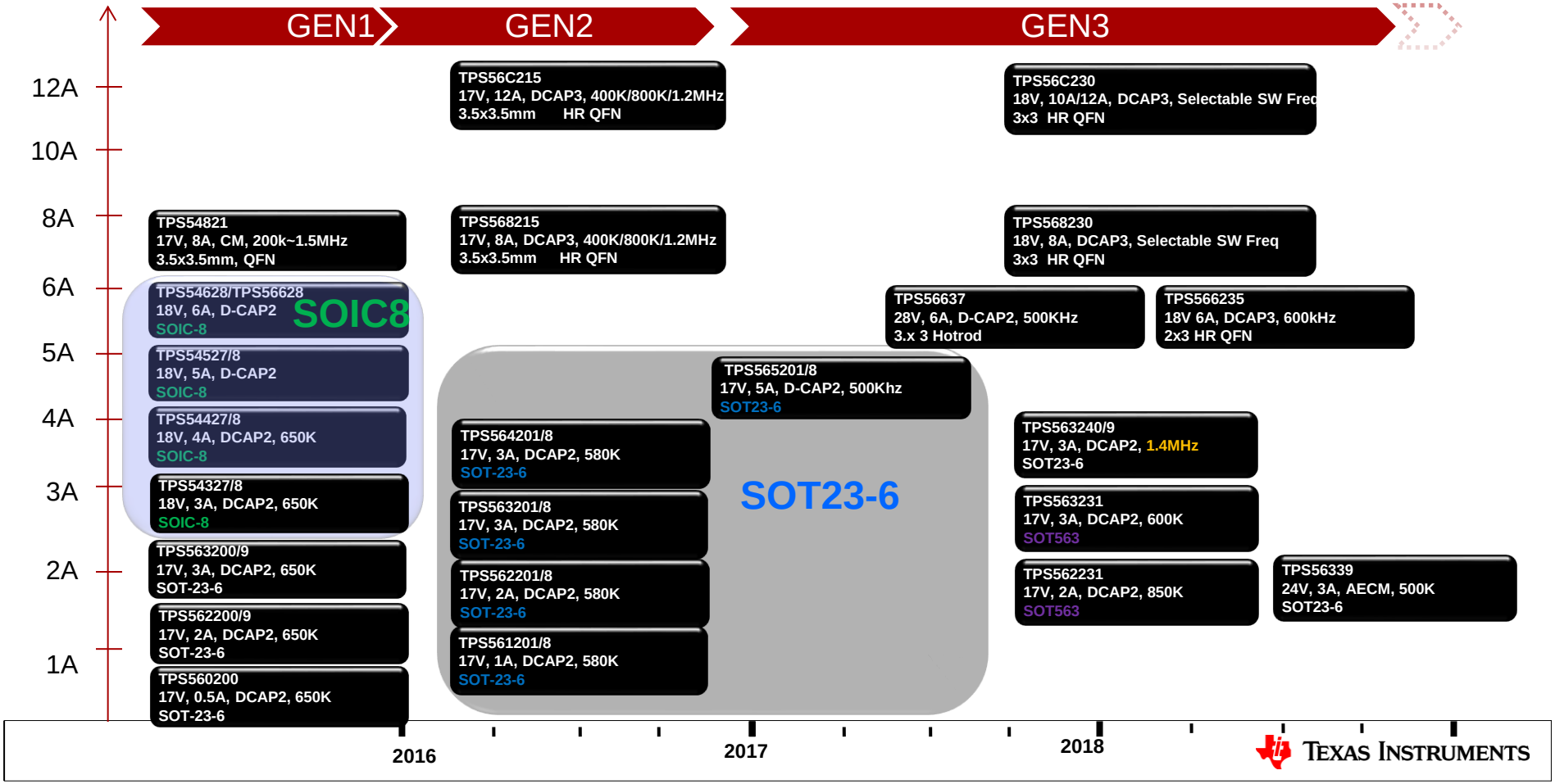

Cost-effective Mid-Vin D-CAP2 SOT23-6 Family

Mid-Vin : 4.5V – 17V

Production

Augusta-2A
TPS562200/9

DCAP2 mode
2A Single Sync Buck
122/72mohm Rdson
650kHz SW Frequency
1% Vref accuracy (-40 to 125C)
Hiccup current protection
SOT23-6 FCOL

Augusta-3A
TPS563200/9

DCAP2 mode
3A Single Sync Buck
68/38 Rdson
650kHz SW Frequency
1% Vref accuracy (-40 to 125C)
Hiccup current protection
SOT23-6 FCOL

Augusta-3A
TPS563240/9

DCAP2 mode
3A Single Sync Buck
70/30 Rdson
1.4MHz SW Frequency
1% Vref accuracy (-40 to 125C)
Hiccup current protection
SOT23-6 FCOL

Augusta-Next 1A
TPS561201/8

DCAP2 mode
1A Single Sync Buck
140/84 mohm Rdson
580kHz SW Frequency
2.5% Vref accuracy (-40 to 125C)
Hiccup current protection
SOT23-6 FCOL

Augusta-Next 2A
TPS562201/8

DCAP2 mode
2A Single Sync Buck
140/84 Rdson
580kHz SW Frequency
2.5% Vref accuracy (-40 to 125C)
Hiccup current protection
SOT23-6 FCOL

Augusta-Next 3A
TPS563201/8

DCAP2 mode
3A Single Sync Buck\
95/57 mohm Rdson
580kHz SW Frequency
2.5% Vref accuracy (-40 to 125C)
Hiccup current protection
SOT23-6 FCOL

Augusta-Next 4A
TPS564201/8

DCAP2 mode
4A Single Sync Buck
50/22 mohm Rdson
560kHz SW Frequency
2% Vref accuracy(-40 to 125C)
Hiccup current protection
SOT23-6 FCOL

Augusta-Next 5A
TPS565201/8

DCAP2 mode
5A Single Sync Buck
31/16 mohm Rdson
500kHz SW Frequency
1% Vref accuracy (-40 to 125C)
Hiccup current protection
SOT23-6 FCOL

Scalable / Pin-to-Pin Compatible

Low Current Solution

- TPS56x201/8
- TPS563240/9
- TPS56x231
- TPS56339

TPS56x201/8

4.5V TO 17V INPUT , 1A - 5A OUTPUT, SYNCHRONOUS STEP DOWN VOLTAGE CONVERTER

Features

- Input Voltage Range 4.5V-17V
- D-CAP2™ Mode Control with 580-kHz Switching Frequency
- Pulse-skip Mode at Light loading: TPS56x201
  Force PWM mode: TPS56x208
- Low Shutdown Current Less than 10uA
- Internal Built Soft Start Time 1ms
- Cycle By Cycle Over-current Limit
- Non-latch UVP and TSD protections
- SOT23-6 Package
- Offers scalable family of devices up to 5A

Applications

- DTV / STB Power Supply
- High Definition Blu-ray Disc™ Players
- Networking Home Terminal
- Wireless Routers

Benefits

- Small footprint to save PCB area
- D-CAP2™ Control with Fast Transient Response
- Low IQ to Get High Efficiency at Light Loading
- Lowest External Component Count to Optimize Board Space and Less Cost

Application Block Diagram

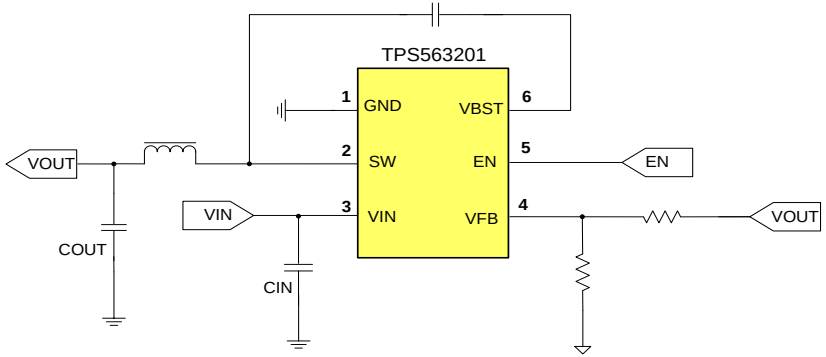

Innovation in Packaging

FCOL (Flip-chip On Leads)

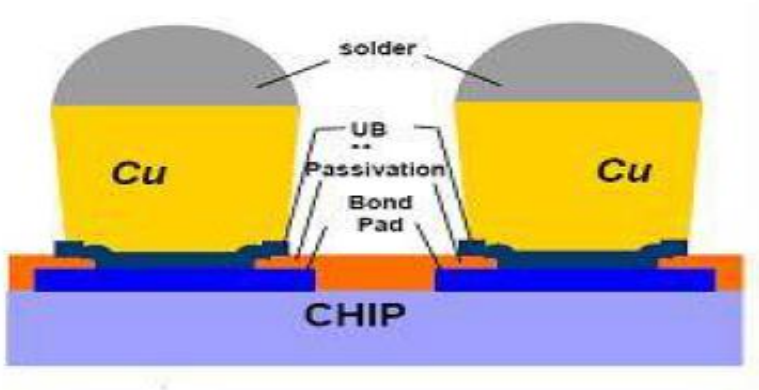

6pin SOT in FCOL

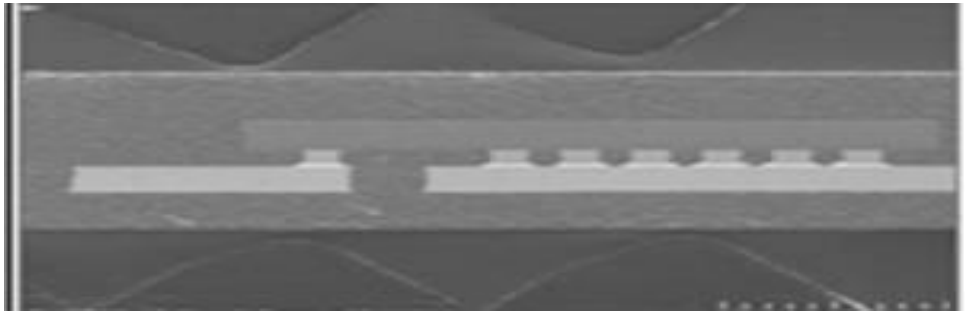

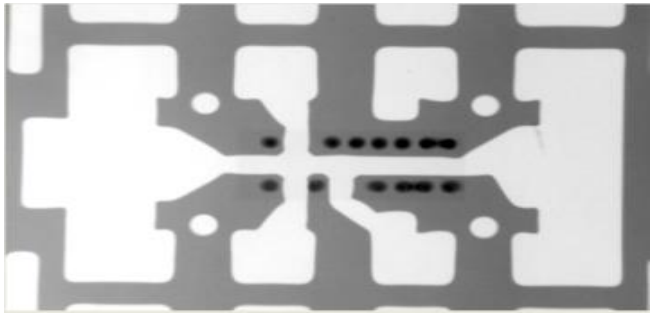

Benefits

- No Bonding Wires
- Lower parasitic inductance →Improve EMI
- Lower Rdson → Better efficiency
- Smaller package size
  4.5 x 6mm (SOIC) → 3 x3 mm (SOT23)
- More cost-effective packaging

TPS565201

4.5V-17V Vin, 5A DCAP2 Synchronous Buck Converter

TPS565201 Efficiency (12V Vin)

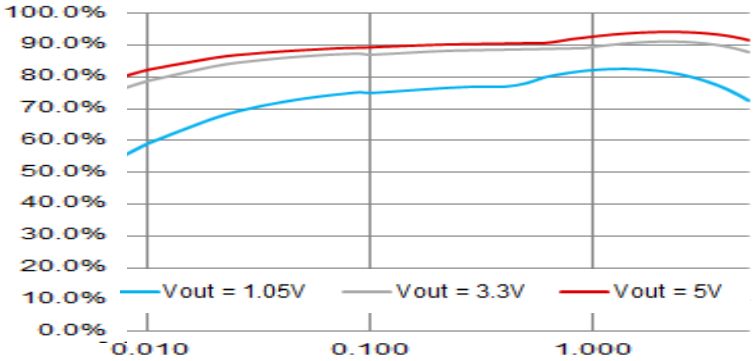

TPS565201 Transient response (12V → 1.05V / 1.25A → 3.75A)

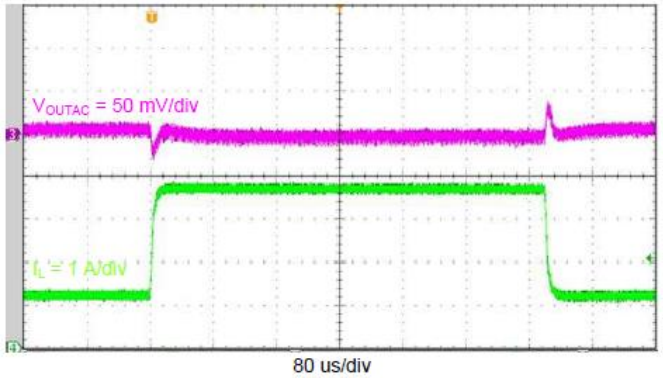

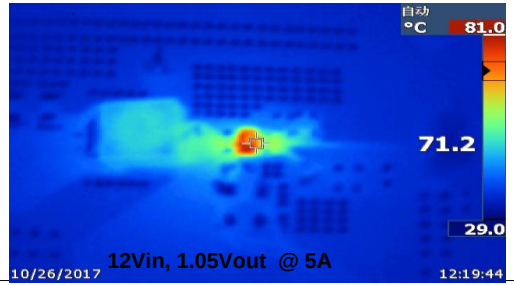

12Vin, 1.05Vout @ 5A

TPS565201 Schematics

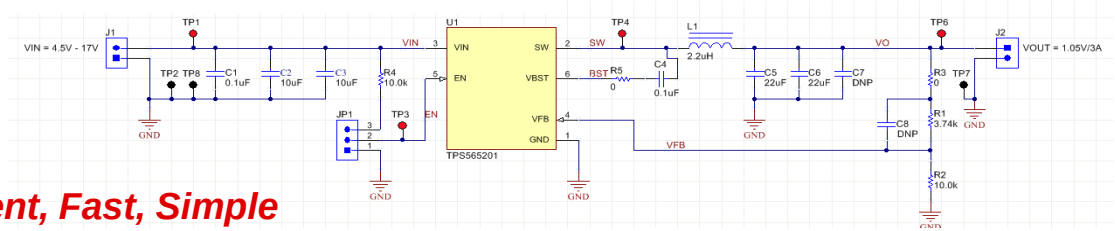

Efficient, Fast, Simple

Low External component count !

Texas Instruments

TPS563240/9

New

Released to Market

17V, 3A, 1.4MHz Synchronous Step Down Converter

Features

- Input Voltage Range 4.5V-17V
- 160uA Quiescent Current
- Integrated **70mΩ/30mΩ** MOSFETs
- **D-CAP3** Control Topology
  - Advanced ECO-mode : TPS563240
  - FCCM mode : TPS563249
- **1.4MHz** Switching Frequency
- Internal Built Soft Start Time 1.5ms
- **1%** Feedback Voltage Accuracy
- OVP, UVP, OCP, OTP Protection
- SOT23-6 package

Applications

- DTV, Set-Top Boxes, Home Gateway / Modems
- Embedded Modules, Access Point Network
- Drones , E-meters, Appliances,….

Benefits

- High Efficiency at heavy loading
- D-CAP3 Control with Fast Transient Response
- Audio-Free with High Efficiency at Light Load (TPS563240)
- System Interference-Free by 1.4MHz FCCM mode (TPS563249)
- Lowest External Component Count
- Small footprint to save PCB area
- Easy-to-use , Cost Effective

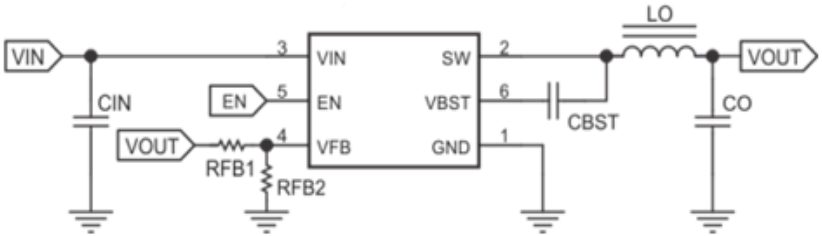

TPS563240/9

17V, 3A, 1.4MHz Synchronous Step Down Converter

New

Released to Market

TPS563201 (580kHz)

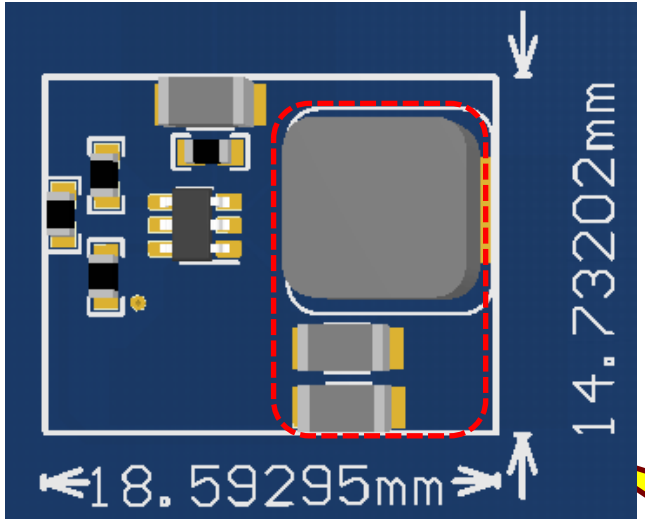

Area is 273 mm2

TPS563249 (1.4MHz)

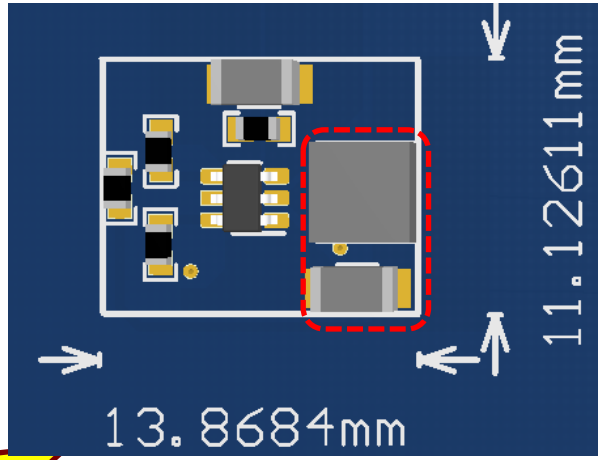

Area is 154 mm2

Area ratio = 56%

Condition : Vin=12V, Vout=1.05V

Texas Instruments

TPS562231/TPS563231

New

Released to Market

4.5V – 17Vin, 2A/3A, 600kHz Synchronous Step Down Converter in SOT56-3

Features

- Wide Input Voltage Range 4.5V-17V
- Integrated **95mΩ /55mΩ** MOSFETs
- **160uA** Quiescent Current
- **D-CAP3** Mode Control
- Advanced ECO- mode
- **600KHz** Switching frequency
- Internal Built Soft Start Time 1.5ms
- **600mV** Feedback Voltage
- OVP, UVP, OCP, OTP Protection
- **SOT563 Package**

  Pin to pin compatible with TPS562231 (2A @ 850kHz)

Applications

- DTV, Set-Top Boxes, Home Gateway, Modems
- Access Point Networks, Wireless Routers
- Large and Small Appliances

Benefits

- High Efficiency at Heavy loading
- D-CAP3 Control with Fast Transient Response
- Get High Efficiency at Light Loading
- Lowest External Component Count to Optimize
- Small footprint to save PCB area
- Cost Effective

Pin-out

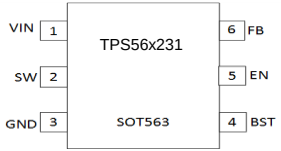

Application

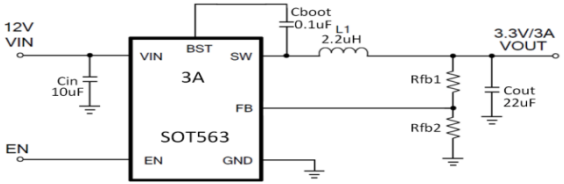

Packaging Evolution for Mid-Vin 3A buck converter

2007 | 2010 | 2014 | 2019

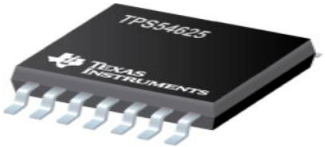

HTSSOP-14

SOIC-8

Flip-Chip on Lead

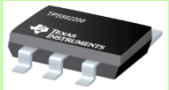

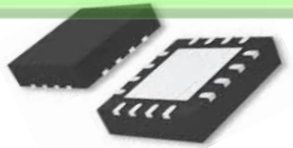

QFN-16

SON-16

SOT23

SOT563

32.5 sq.mm

Smaller package size.
Lower package cost.
Similar thermal performance.

2.56 sq.mm

TPS56339

New

Released to Market

4.5V to 24V, 3A SOT23-6 SYNCHRONOUS 500kHz STEP DOWN CONVERTER

Features

- Wide Input Voltage Range 4.5V-24V
- Integrated 75mΩ/35mΩ MOSFETs
- Advance Emulated Current-Mode Control (AECM)
- Supports up to 95% duty cycle operation
- Fixed 500kHz Switching Frequency
- Internal Built Soft Start Time 5ms
- 1.5% (0.8V) Feedback Voltage Accuracy
- OVP, UVP, OCP, OTP Protection
- SOT23-6 Package

Benefits

- Provides Fast Transient response in fixed constant SW frequency
- Low output ripple during light load to save the output cap
- Lowest external component count to optimize board space, and less cost
- Easy to design -- no need for loop compensation adjustments
- Fast load transient response to save the output cap
- Support wide output voltage range (up to 95% of Vin)

Applications

- Surveillance
- Audio
- Printer
- DTV, Modems
- 12-V, 19-V Distributed Power-Bus Supply

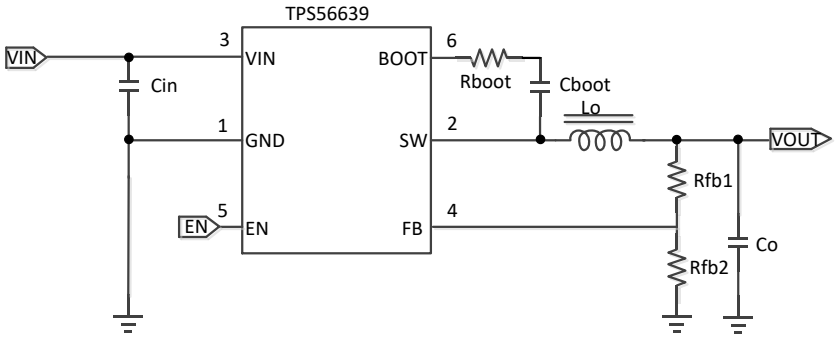

Higher Current Solution

- TPS566235
- TPS568230
- TPS56x215

TPS566235

New

Released to Market

4.5V-18V Vin, 6A Synchronous Buck Converter

Features

- Input voltage range 4.5V to 18 V
- Support 0.6-7V output voltage
- Quiescent current less than 100uA
- DCAP3—fast transient response
- Integrated 30mΩ/13mΩ RDSON
- 600Khz switching frequency
- MODE Pin : Advanced Eco-Mode / FCCM selection
- Internal 1.5ms SS time, with output discharge
- PGOOD Indicator
- 1% accuracy for FB voltage
- OCP, OVP, UVP (auto-recovery) and TSD Protection
- 2x3mm Hotrod package

Applications

- High-end DTV , STB , Modems
- eSSD, Multi-functional printers
- Servers / Networking Systems
- Distributed Power Systems for 5V, 12V, 15V Bus rails

Benefits

- Absolute lowest external components
- Fast transient response
- No external compensation
- Cost effective

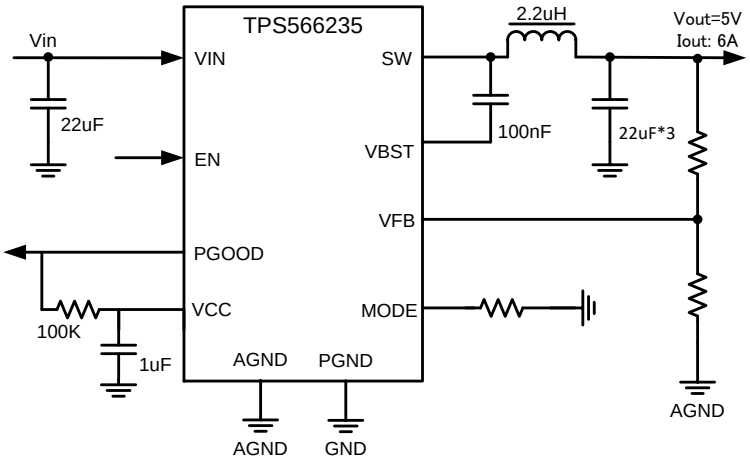

Innovation for Packaging

Hotrod packaging

Hotrod is a flip-chip on lead frame QFN package

- Major performance enhancements
  - Lower Rds_on
    - Higher Efficiency
  - Smaller solution size
  - Lower inductance => dramatically lower switch node ringing (see bottom image)
  - Smaller Package footprint

Standard wire bond QFN package

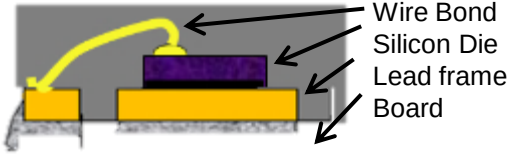

'Hotrod' flip chip on lead frame QFN

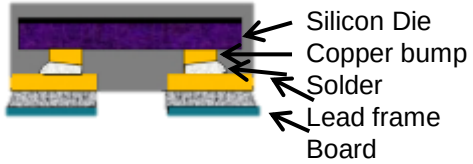

Die is flipped and placed directly onto the lead frame

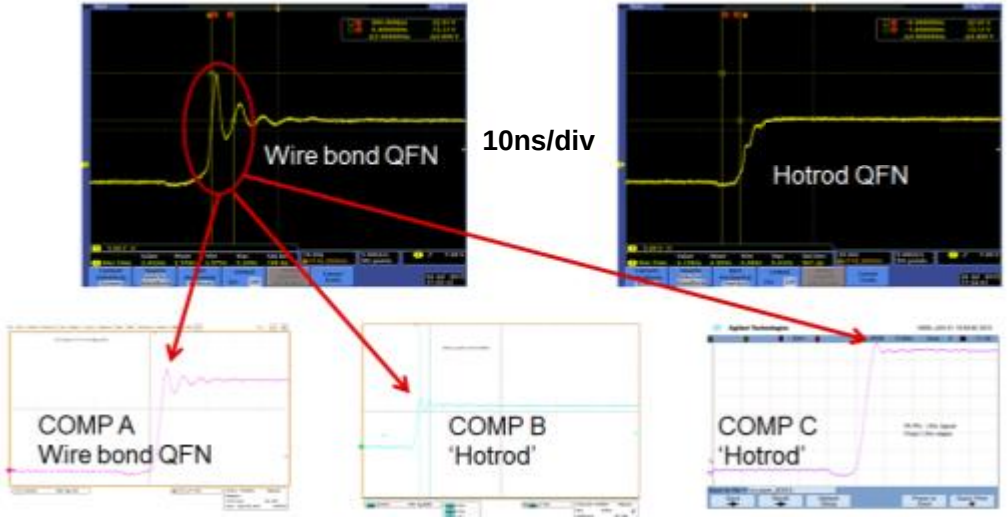

TPS566235

New

Released to Market

4.5V-18V Vin, 6A Synchronous Buck Converter

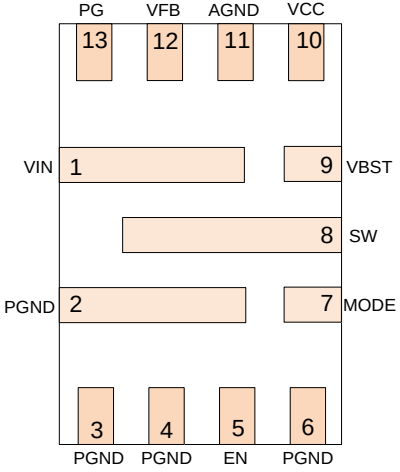

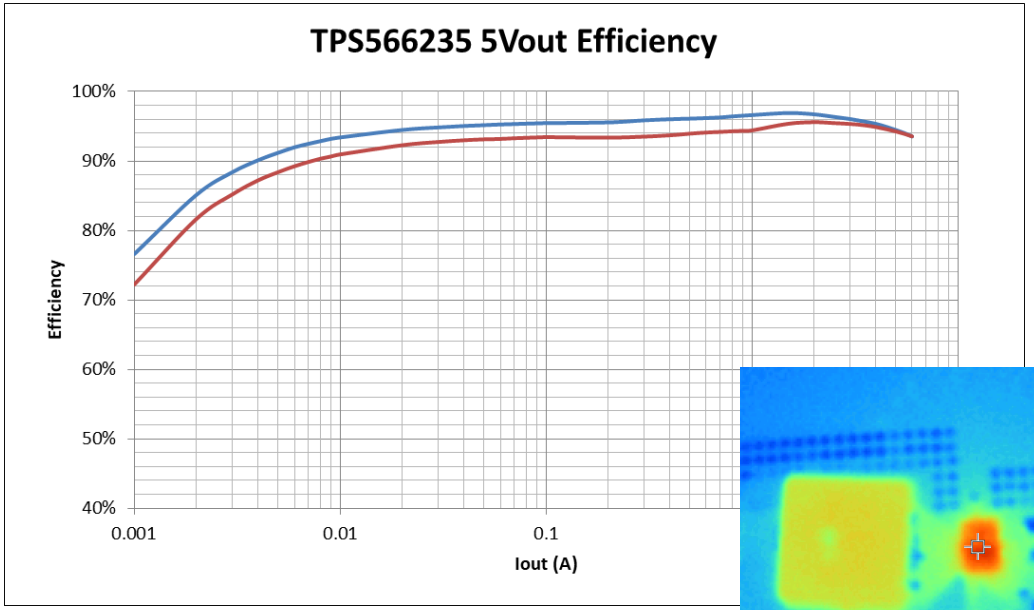

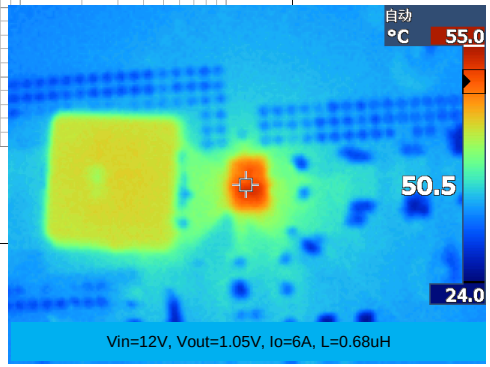

TPS568230

New

Released to Market

18V Vin, 8A Synchronous Buck Converter with Adjustable Output

Features

- Input Voltage Range 4.5V to 18V
- Adjustable Output Voltage
- Quiescent Current Less than 80uA
- DCAP3—Fast Transient Response
- Integrated 25mΩ/10mΩ R_{DSON}
- Internal 1.5ms SS time, with Output Discharge
- PGOOD Indicator
- 1% Accuracy for FB voltage
- MODE pin
  - Selectable SW Frequency (0.6 / 0.8 / 1MHz)
  - FCCM / Advanced Eco-mode
- OOA (Out-of-Audio) feature --- operates above 25khz
- OCP, OVP, UVP (Latch) and TSD Protection
- 3.0*3.0mm QFN (Hotrod) package

Applications

- High-end DTV , STB , Modems
- eSSD, Multi-functional printers
- Servers / Networking Systems
- Distributed Power Systems for 5V, 12V, 15V Bus rails

Benefits

- Absolute Lowest External Components
- Fast Transient Response
- No External Compensation
- Cost Effective
- Small Footprint to Save PCB Area

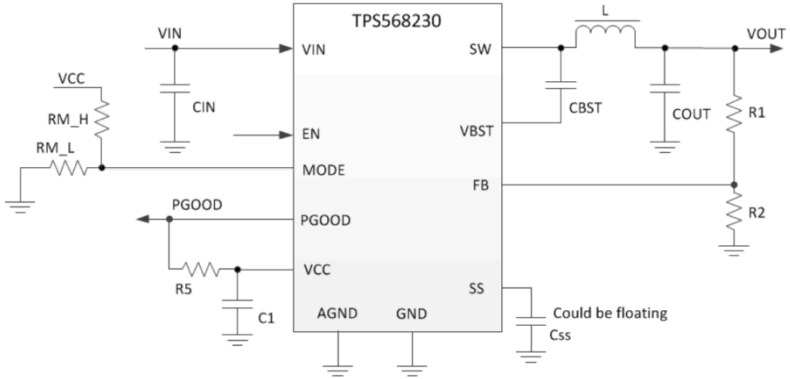

Load Transient Comparison Between PCM & DCAP3

VIN=12V VOUT=3.3V IOUT=0A-6A 2.5A/us Zoomed in

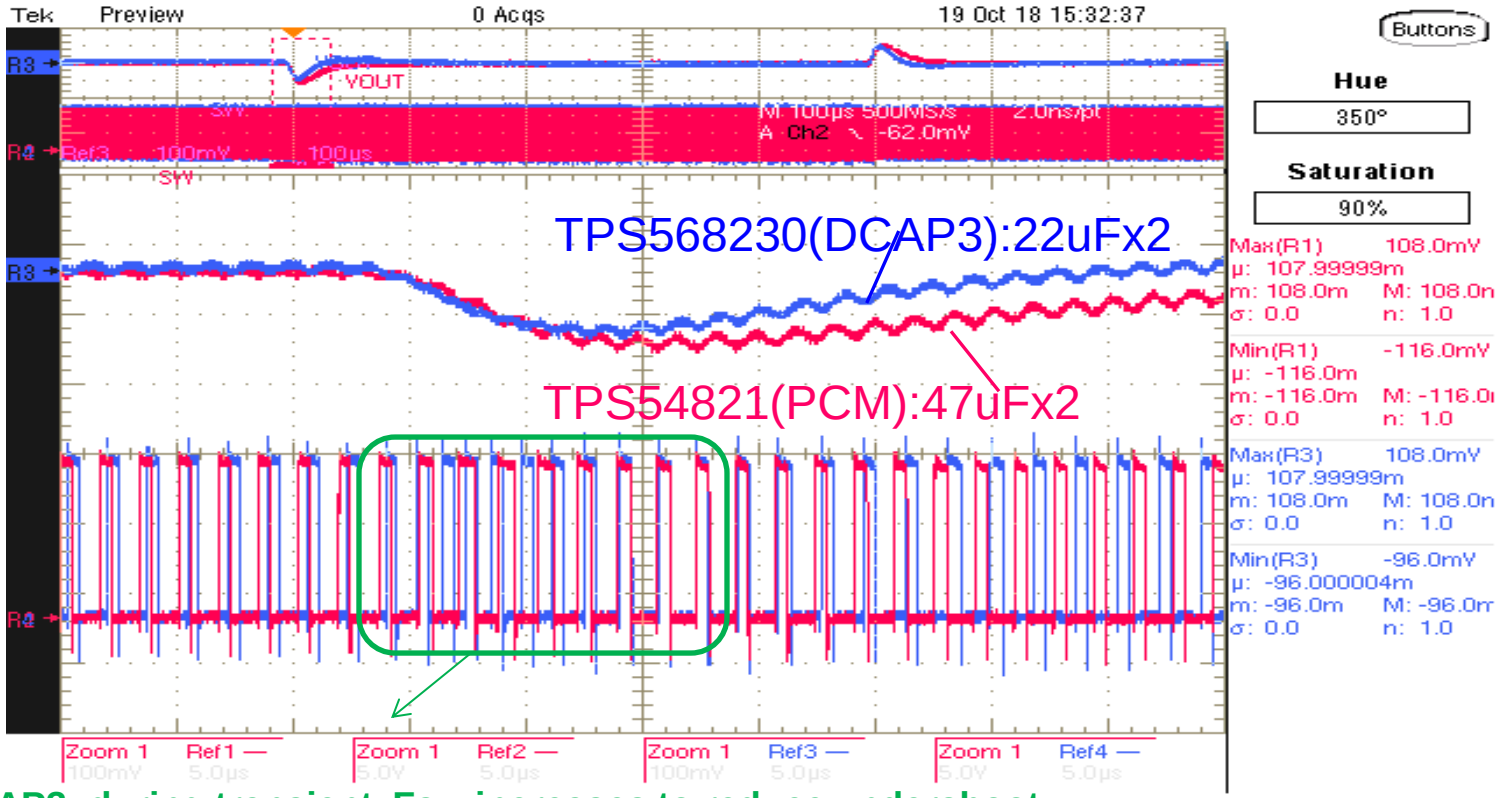

In DCAP3, during transient, Fsw increases to reduce undershoot.

In PCM, Fsw keeps constant during transient.

DCAP3 can save you 50uF!

TPS56x215

Released to Market

17V_{IN}- 0.6 to 5.5V_{OUT} 8A,12A Monolithic Synchronous Step-Down Converter

Features

- D-CAP3 Mode with adaptive on - time control
- Low RDSon -24/8mΩ (TPS568215) ,12/4mΩ (TPS56C215)
- Selectable Fsw of 400, 800 and 1200kHz
- Selectable Advanced ECO-Mode/FCCM
- Adjustable Soft-Start Time(Default 1ms)
- Adjustable current limit with Cycle by Cycle Over Current Limit protection
- 0.6V V_{REF} - 0.5% 25ºC / 1% -40º to 125ºC
- Non Latch OVP, UVLO and TSD Protection
- Available in 3.5 x 3.5mm Hotrod package

Note: TPS568215OA supports OOA (out-of-audio) feature

Applications

- Base stations, Small cells for Telecoms
- Cloud server application
- High-end DTV
- Consumer Electronics

Benefits

- Fast transient response, no external compensation High Efficiency operation
- Flexibility in Size vs Efficiency
- Applications requiring light load efficiency
- Programmable Vout ramp up
- Flexibility in output current limit section allowing optimization of output inductor size
- Accurate output voltage
- Built in protection for reliable operation
- Small Size with Enhanced thermal performance and low EMI

3.5x3.5mm HotRod Package
Bottom View

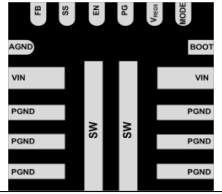

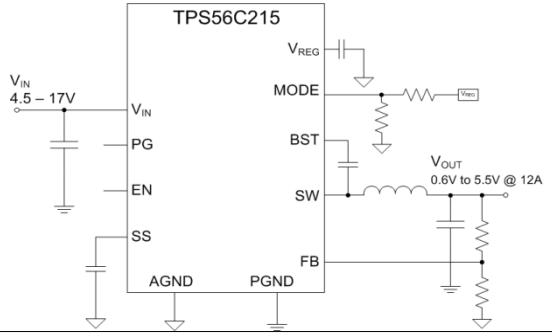

Satellite Receiver LNB Power Solution

- TPS65233
- TPS65235

TPS65233

4.5V – 20Vin, 1A LNB Voltage regulator with I2C interface

Features

- Complete Integration Solution for LNB DiSEqC 1.x with I^2C
- Supports 5V, 9V and 12V Power Bus
- Up To 1000mA Accurate Output Current Limit Adjustable by External Resistor
- Boost Converter with Low Rdson Internal Power Switch
- Highest Power Efficiency in Industry
- Supports All Ceramic Capacitor External Components
- Dedicated Enable Pin for non-I2C Application
- Low Noise Low Drop Output with Push-pull Output Stage
- Smallest Package in Industry 16pin 3x3mm QFN

Applications

- Set Top Box Satellite Receiver
- TV Satellite Receiver
- PC card Satellite Receiver

Benefits

- High Efficiency to Reduce Power Loss
- Supports Both I2C and Non-I2C Systems
- Flexible 22kHz Generation
- Board Space Saving, Target Two-layer PCB Applications
- Complete I2C Setting and Diagnostic Registers

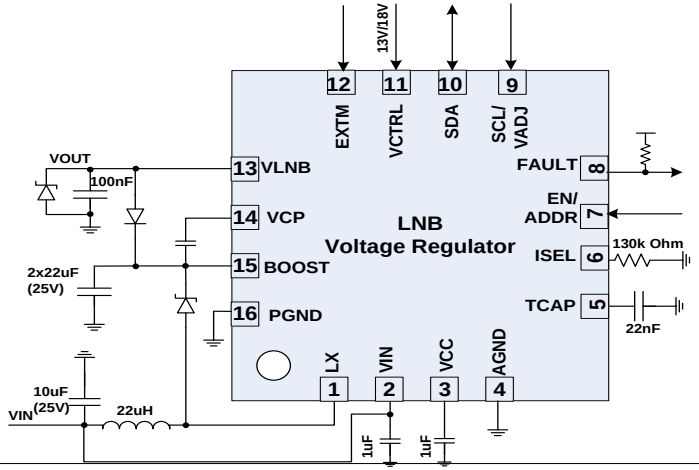

TPS65235

4.5V – 20Vin, 1A LNB Voltage regulator with I2C interface

Features

- DiSEqC 2.x Compatible with I2C Interface
- OOA function integrated
- Built-in accurate 22kHz Tone Generator
- Both 44KHz and 22KHz EXTM Tone input support
- Vin range from 4.5V – 16V
- Up to 1000mA Current Limit
- 140mΩ Rdson Internal Power Switch
- Support I2C and Non-I2C application
- Low noise Low Drop output with Push-Pull Output
- Adjustable Soft-start and 13/18V Transition Time
- LNB Short Circuit Dynamic Protection
- Diagnostics for Vout, Vin UVLO, Tone Output
- Cable Good for Disconnect Diagnostic

Applications

•Set Top Box Satellite Receiver
•TV Satellite Receiver
•PC card Satellite Receiver

Benefits

- Integration DiSEqC 2.x solution
- Audible noise avoid in application
- Wide input range supports 5V, 9V, 12V, 15V rail
- High output current support capacitive loading
- High efficiency for power saving
- Flexible communication with DEMO/SOC
- Built in fault detection and protections
- Smaller package to save PCB

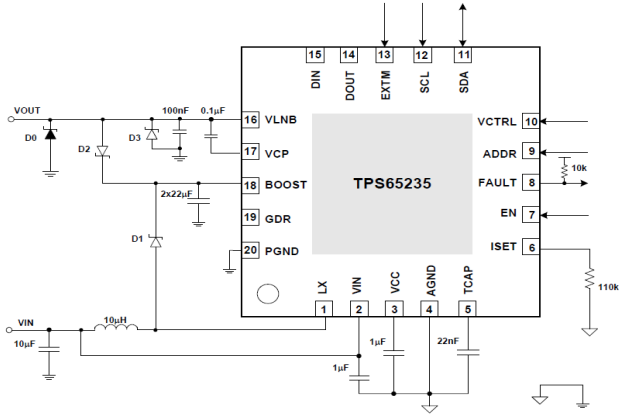

Selection Guide: MCP Power Solution for Set-Top-Box

Product Name	Product Description	Comment
17V, 1A – 5A in SOT23 Package		
TPS561201/8	17V, 1A, DCAP2, Eco-mode/FCCM mode	Pin2Pin Compatible
TPS562201/8	17V, 2A, DCAP2, Eco-mode/FCCM mode	
TPS563201/8	17V, 3A, DCAP2, Eco-mode/FCCM mode	
TPS564201/8	17V, 4A, DCAP2, Eco-mode/FCCM mode	
TPS565201/8	17V, 5A, DCAP2, Eco-mode/FCCM mode	
TPS562210A/19A	17V, 3A, DCAP2, in SOT23-8 package	PG + external Soft Start
TPS563210A/19A	17V, 3A, DCAP2, in SOT23-8 package	PG + external Soft Start
TPS563240/9	17V, 3A, DCAP2, 1.4MHz, in SOT23-6	Fsw = 1.4MHz
TPS562231	17V, 2A, DCAP3, in SOT563 package	SOT563
TPS563231	17V, 3A, DCAP3, in SOT563 package	SOT563
28V, 2A/3A in SOT23 Package		
TPS54202	28V,2A, CM, Eco-mode, ULQ	
TPS54302	28V,3A, CM, Eco-mode, ULQ	
TPS56339	24V, 3A, AECM, in SOT23-6 Package	AECM
High Current		
TPS566235	18V Vin, 6A in HotRod QFN package	HotRod QFN
TPS568230	18V Vin, 8A in HotRod QFN package	HotRod QFN
TPS568215	17V, 8A, DCAP3, Selectable Eco-mode	HotRod QFN
TPS56C215/C230	17V/18V, 12A, DCAP3, Selectable Eco-mode	HotRod QFN
LNB		
TPS65233/-1	20V, 1A LNB Voltage regulator with I2C	DiSEqC 1.x
TPS65235/-1/-2	20V, 1A LNB Voltage regulator with I2C	DiSEqC 2.x, OOA

TI Reference Designs

Charter

- TI reference design makes TI products easy to use

Impact

- Presently producing over 1,000 designs per year
- Company wide design library of over 13,000 designs
- 2,000 designs available to customers in TI Designs

Support levels include

- Develop Customer Specific Designs
- Block diagrams and IC recommendations
- Paper analysis (Design, Cost, Area Study)
- Detail design (Schematics, PWB layouts, simulation)
- Prototype Build and Test (Samples to customers and test results)
- Customer layout and debug support
- Generalization of reference design, articles, and design notes

Available at
http://www.ti.com.cn/cn/reference-designs/index.html

Ultra-low Stand-by Power, High-efficiency, DC-DC Power Supply Reference Design for Set-top Box

PMP21065 (ACTIVE)

Description & Features | Technical Documents | Support & Training | Order Now

See the Important Notice and Disclaimer covering reference designs and other TI resources.

Key Document

- PMP21065 Test Results (PDF 1577 KB)
  17 Oct 2017

» View All Technical Documents (7)

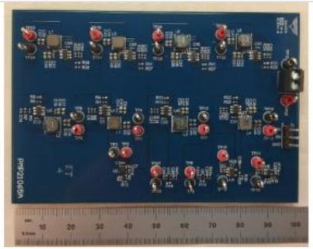

PMP21065 Set-top Box Power Reference Design Board Image

Description

The PMP21065 Reference design operates off a typical 12V DC input to produce several common rails seen in set top boxes today. The key objectives of the design are to be low-cost, small in size and low stand-by power with high efficiency to help customers meet compliance to new regulatory guidelines on STB power consumption.

Schematic/Block Diagram

Quickly understand overall system functionality.

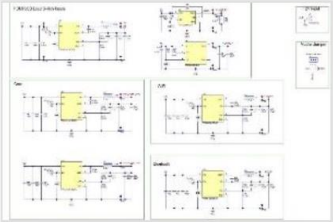

Download Schematic

Test Data

Get results faster with test and simulation data that's been verified.

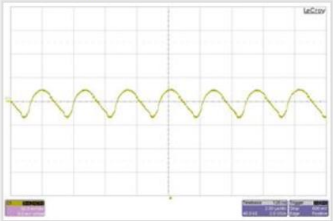

Download Test Data

Design Files

Download ready-to-use system files to speed your design process. Get Viewer.

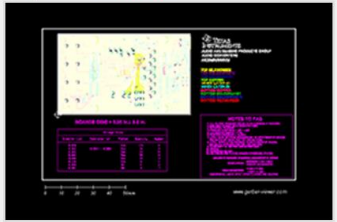

Download Design Files

Webench®

- Helps select the best part and completes the design by selecting components based on design criteria
- Start design by entering Vin/Vout/Iout and other criteria in advances options
- Allows the design to be optimized, edited, exported, simulated, and more
- However, if unencrypted PSPICE models are needed, please contact TI

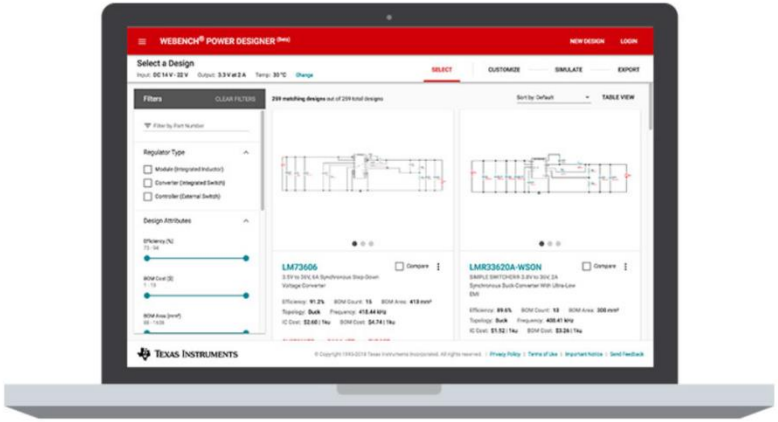

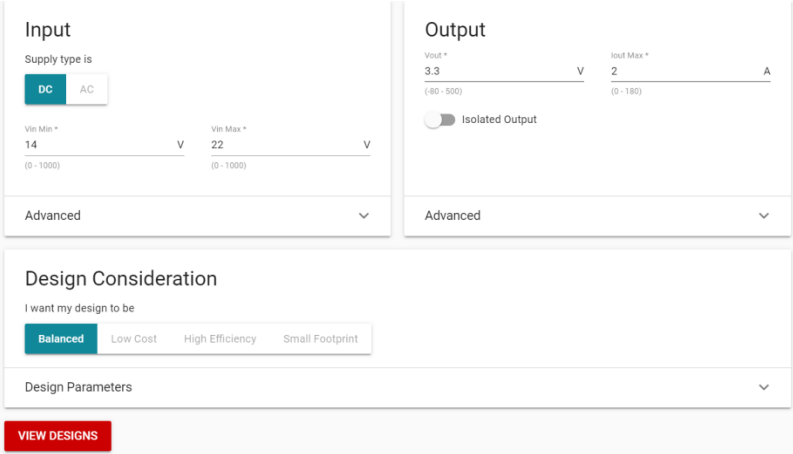

http://www.ti.com.cn/zh-cn/design-resources/design-tools-simulation/webench-power-designer.html

Thank You

IMPORTANT NOTICE AND DISCLAIMER

TI PROVIDES TECHNICAL AND RELIABILITY DATA (INCLUDING DATASHEETS), DESIGN RESOURCES (INCLUDING REFERENCE DESIGNS), APPLICATION OR OTHER DESIGN ADVICE, WEB TOOLS, SAFETY INFORMATION, AND OTHER RESOURCES “AS IS” AND WITH ALL FAULTS, AND DISCLAIMS ALL WARRANTIES, EXPRESS AND IMPLIED, INCLUDING WITHOUT LIMITATION ANY IMPLIED WARRANTIES OF MERCHANTABILITY, FITNESS FOR A PARTICULAR PURPOSE OR NON-INFRINGEMENT OF THIRD PARTY INTELLECTUAL PROPERTY RIGHTS.

These resources are intended for skilled developers designing with TI products. You are solely responsible for (1) selecting the appropriate TI products for your application, (2) designing, validating and testing your application, and (3) ensuring your application meets applicable standards, and any other safety, security, or other requirements. These resources are subject to change without notice. TI grants you permission to use these resources only for development of an application that uses the TI products described in the resource. Other reproduction and display of these resources is prohibited. No license is granted to any other TI intellectual property right or to any third party intellectual property right. TI disclaims responsibility for, and you will fully indemnify TI and its representatives against, any claims, damages, costs, losses, and liabilities arising out of your use of these resources.

TI’s products are provided subject to TI’s Terms of Sale (www.ti.com/legal/termsofsale.html) or other applicable terms available either on ti.com or provided in conjunction with such TI products. TI’s provision of these resources does not expand or otherwise alter TI’s applicable warranties or warranty disclaimers for TI products.

Mailing Address: Texas Instruments, Post Office Box 655303, Dallas, Texas 75265
Copyright © 2019, Texas Instruments Incorporated